GOODWE

V1.1-2026-09-28

ET G3 Series Hybrid Inverter

(GW25K-ET-G30|GW29.999K-ET-G30|GW30K-ET-G30|GW37.5K-ET-G30|GW40K-ET-G30|
GW49.999K-ET-G30|GW50K-ET-G30|GW18K-ET-L-G30|GW25K-ET-L-G30|GW30K-ET-L-G30)

Quick Installation Guide
快速安装指导

Copyright © GoodWe Technologies Co., Ltd. 2026. All rights reserved.
版权所有©固德威技术股份有限公司 2026。保留所有权利。

EN-English

- The information in this quick installation guide is subject to change due to product updates or other reasons. This guide cannot replace the product labels or the safety precautions in the user manual unless otherwise specified. All descriptions here are for guidance only.
- All operations should be performed by trained and knowledgeable technicians who are familiar with local standards and safety regulations.
- Strictly follow the installation, operation, and configuration instructions in this guide and user manual. The manufacturer shall not be liable for equipment damage or personal injury if you do not follow the instructions.

ZH-中文

- 因产品版本升级或其他原因，本文档内容会不定期进行更新。如无特殊约定，本文档不可取代产品标签或用户手册。本文档中的所有描述仅作为使用指导。
- 设备所有操作必须由专业、合格的电气技术人员进行，技术人员需熟知项目所在地相关标准及安全规范。
- 未按照本文档或对应用户手册要求安装、使用、配置设备造成的设备损坏或人员伤害，不在设备厂商责任范围之内。

Official Website | 官方网站 | More Info | 更多信息

340-01373-01

GoodWe Technologies Co., Ltd.
No. 90 Zijin Rd., New District,
Suzhou, 215011, China
www.goodwe.com
service@goodwe.com

固德威技术股份有限公司
中国 苏州 高新区紫金路90号
T: 400-998-1212
www.goodwe.com
service@goodwe.com

Procedure

1 EN Installation ZH 安装

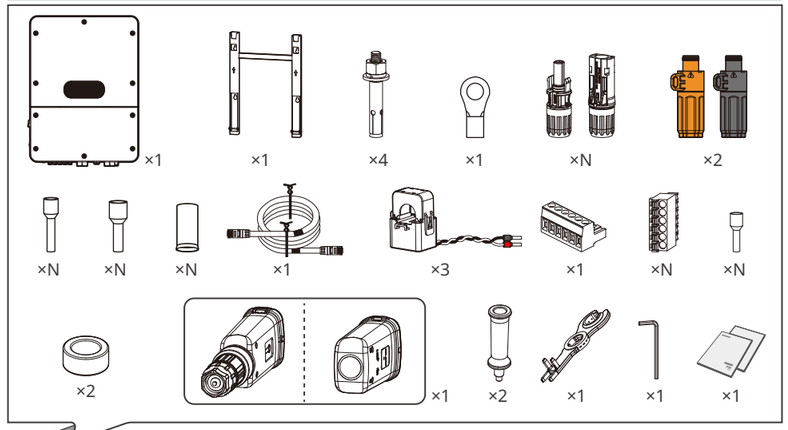

N≥0: Quantity depends on the inverter model.
N≥0:数量依据产品配置而定。

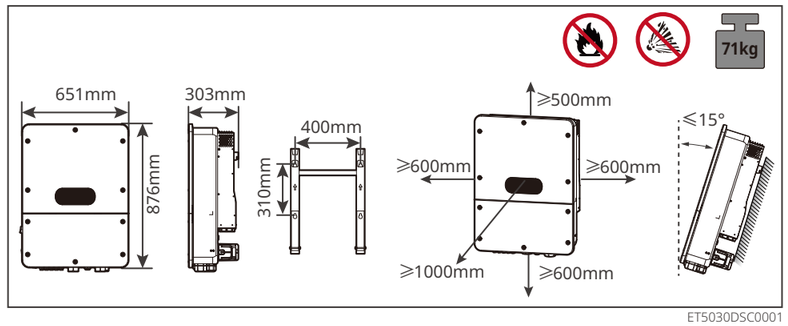

ET5030DSC0001

Wall-Mounting/挂墙安装

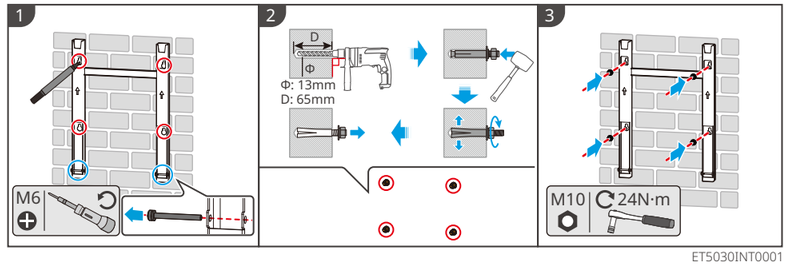

ET5030INT0001

Cabinet Installation/机柜安装

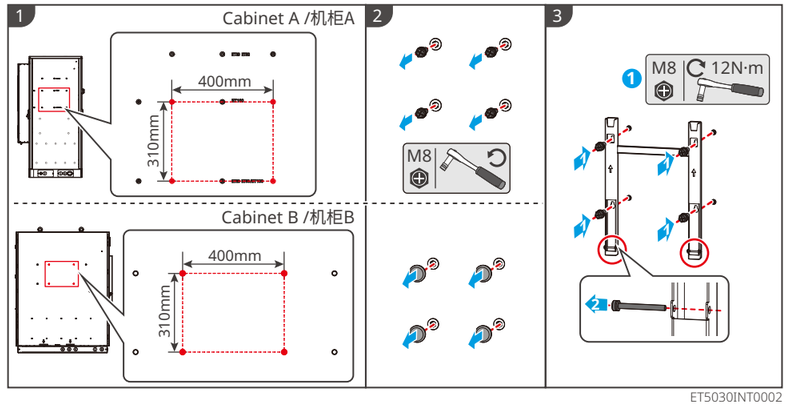

ET5030INT0002

Installing the Inverter/安装逆变器

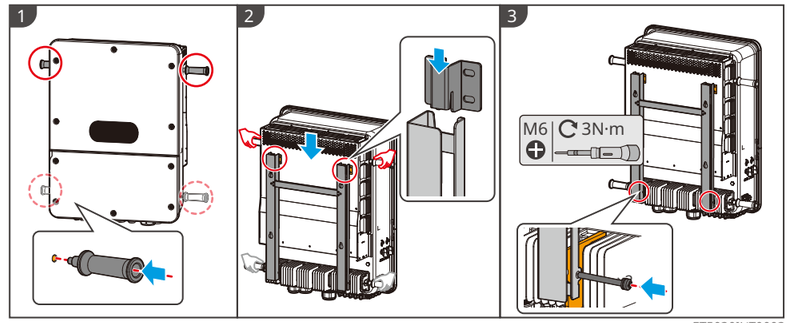

ET5030INT0003

Removing the Cover/移除盖板

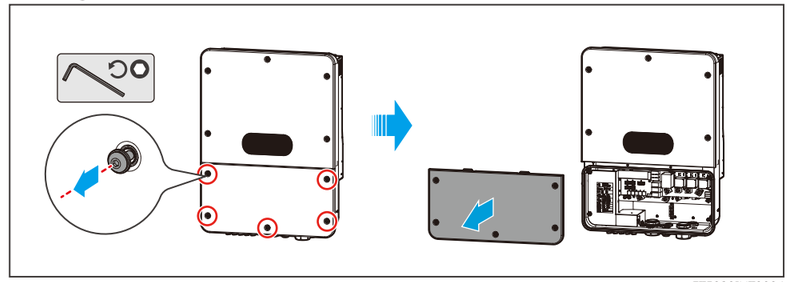

ET5030INT0004

2 EN Electrical Connection ZH 电气连接

PE (⏚)

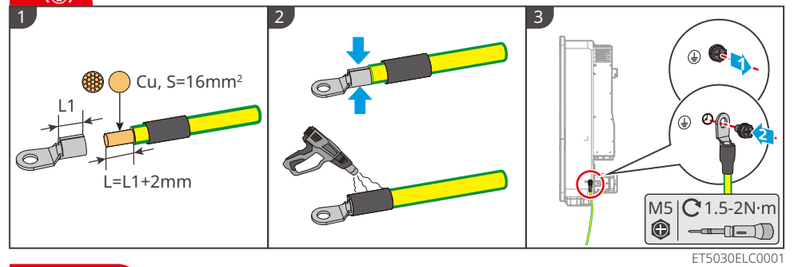

ET5030ELC0001

DC (MPPT)

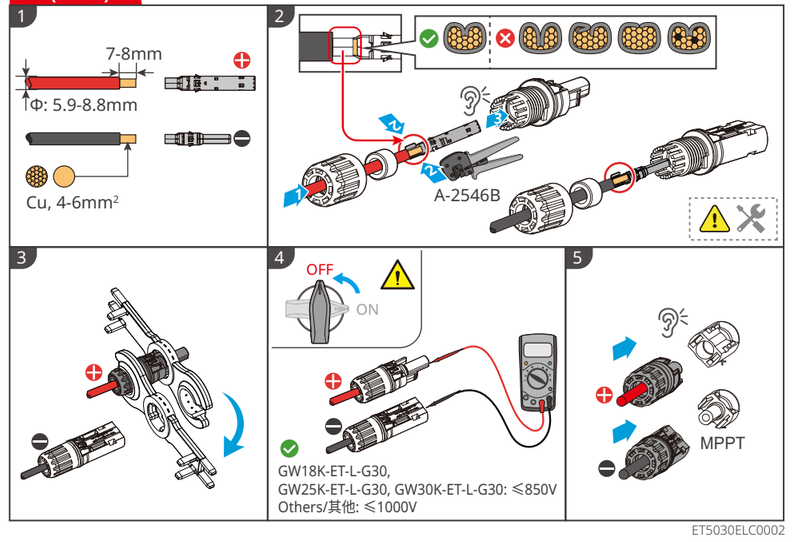

ET5030ELC0002

Procedure

DC (BAT)

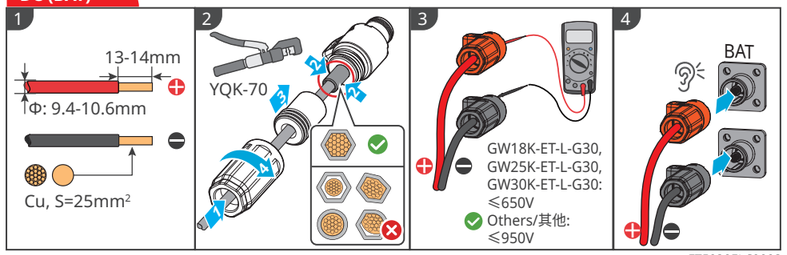

ET5030ELC0003

AC (GRID&BACK-UP&SMART)

Ⓐ : GW25K-ET-G30 | GW29.999K-ET-G30 | GW30K-ET-G30 | GW18K-ET-L-G30

Ⓑ : GW37.5K-ET-G30 | GW40K-ET-G30 | GW49.999K-ET-G30 | GW50K-ET-G30 | GW25K-ET-L-G30 | GW30K-ET-L-G30

(16mm²) (25mm²) (50mm²)

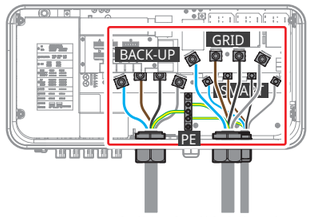

Port Type 端口类型	Cable Type 线缆类型	Ⓐ : Cu, S(⬤)	Ⓑ : Cu, S(⬤)
SMART	L1/L2/L3/N	16mm²	25mm²
	PE	16mm²	25mm²
GRID/ BACK-UP	L1/L2/L3/N	25mm²	50mm²
	PE	16mm²	25mm²

n≤17: Do not use PIN terminals
不使用管状端子

n>17:

HS-95WF

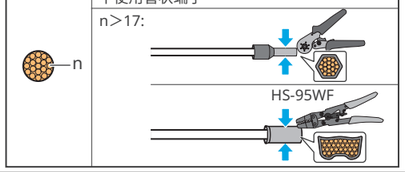

ET5030ELC0020

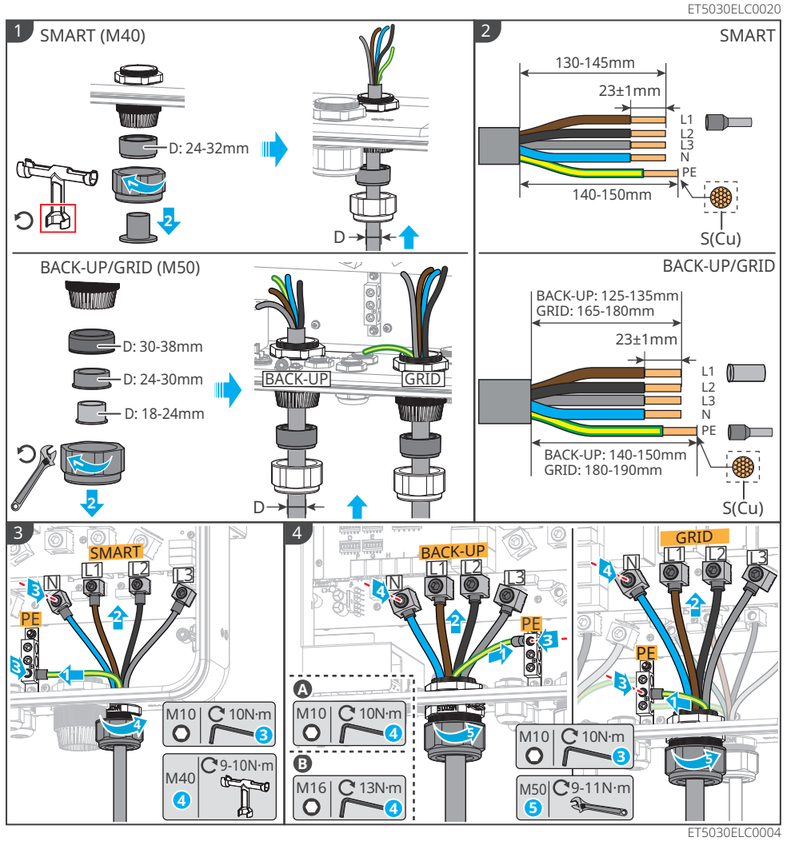

ET5030ELC0004

COM (COM1&COM2&COM3)

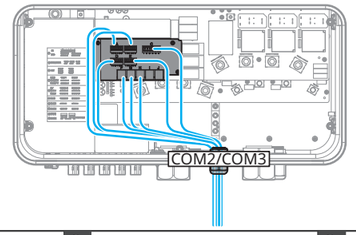

COM2	COM3
A: DI&DO B: DRM&RCR C: CT D: RSD&EMS/PV E: EV&METER F: METER	G: BMS1 H: BMS2 I: PAR1 J: PAR2

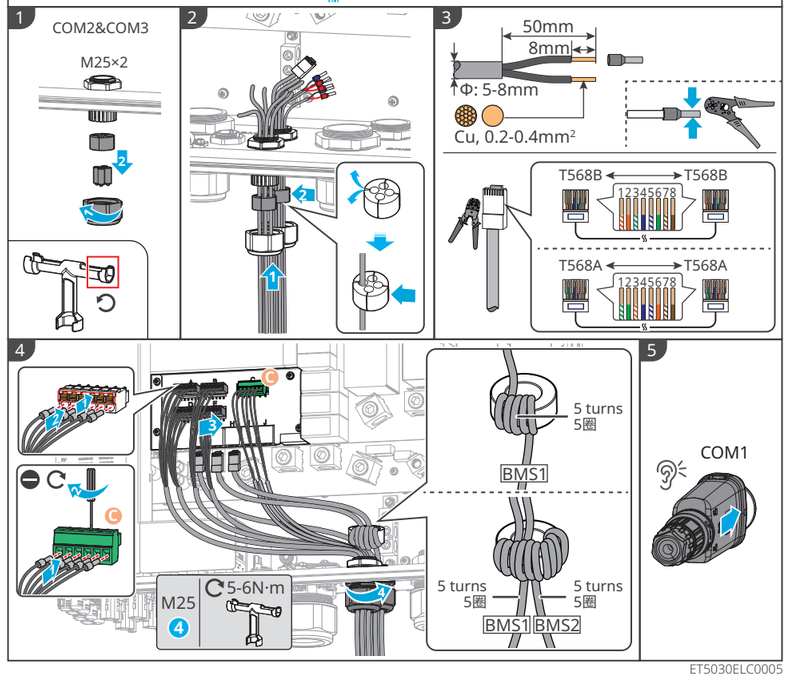

ET5030ELC0005

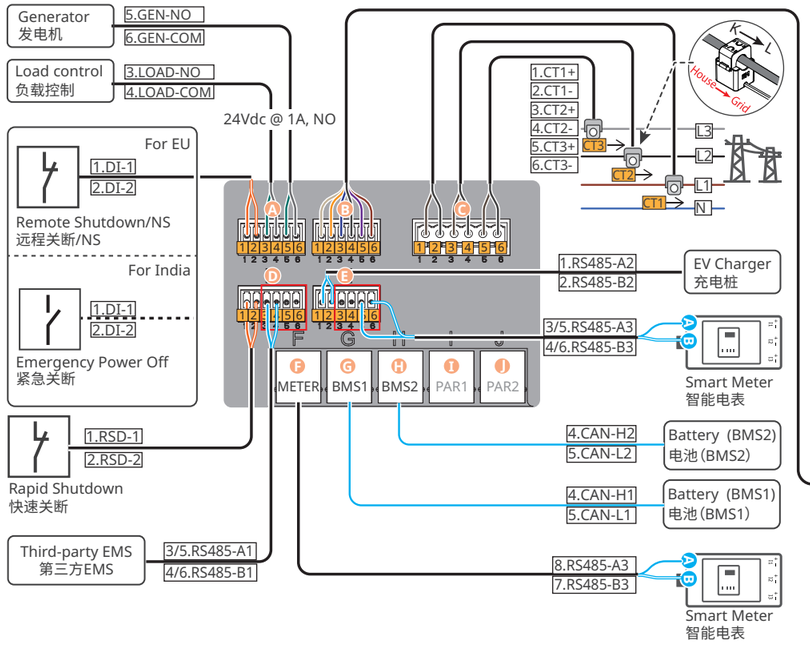

Installing the Cover/安装盖板

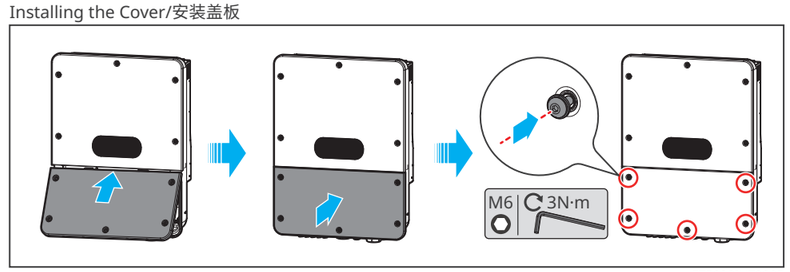

ET5030INT0005

3 EN Commissioning and Monitoring ZH 调测

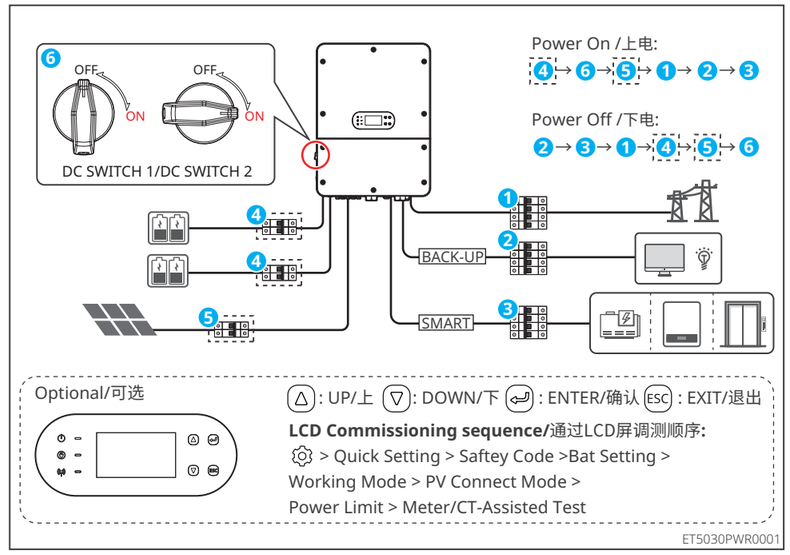

ET5030PWR0001

SEMS+ App or SEMS+ WEB

小固云窗+ App 或 小固云窗+ WEB

EnWG 14a

When S1, S2, and W3 are disconnected at the same time, the nominal output power is 100%.
S1,S2,W3同时断开时，额定输出功率为100%

DI2 和 DI3 可根据当地法规进行配置。
DI2 and DI3 are configurable as required by local regulations.

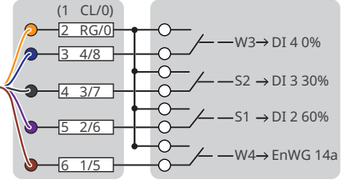

RCR

DI2 和 DI3 可根据当地法规进行配置。
DI2 and DI3 are configurable as required by local regulations.

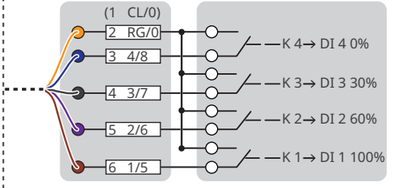

DRM

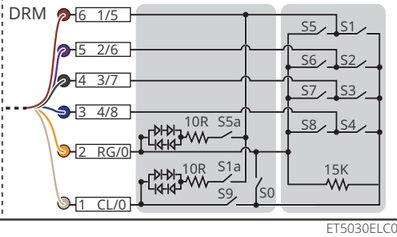

ET5030ELC0006